ARISTON

SPARE PARTS EXPLODED VIEW
STORAGE ELECTRIC WATER HEATERS

Model

VELIS TECH WIFI EU

R8219229-02 - 22/05/2024

EN	FR	IT	ES	DE	NL

VELIS TECH WIFI EU

Storage Electric Water Heaters

Col	Reference	Model type	Begin	End
1	3100911	VELIS TECH WIFI 50 EU	09-2023	-
2	3100912	VELIS TECH WIFI 80 EU	09-2023	-
3	3100913	VELIS TECH WIFI 100 EU	09-2023	-

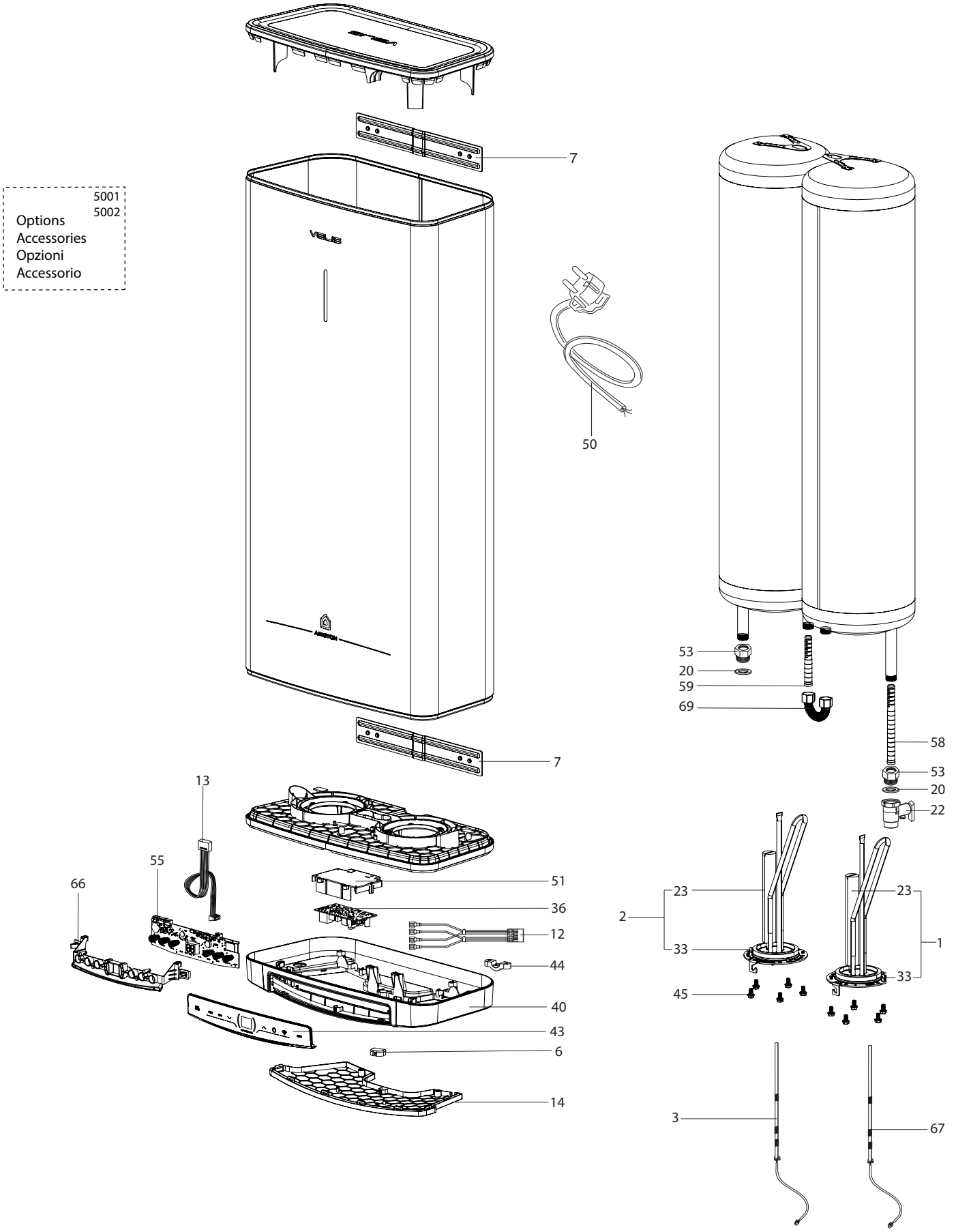
5001
5002
Options
Accessories
Opzioni
Accessorio
7
7
50
53
20
59
69
58
53
20
22
13
55
66
51
36
12
44
40
43
6
14
23
2
33
23
1
33
45
3
67

R8227981

	Description	Manf. Pt. N	Type	TECH WIFI 50	TECH WIFI 80	TECH WIFI 100	4	5	6	7	8	9	10	11	12	13	14	15	16	17	18	From	to
0001	COMPLETE FLANGE 1,5 KW 230 V (HE2)	6500577000		●																			
	COMPLETE FLANGE 1,5 KW 230 V (HE2)	6500581900			●	●																	
0002	COMPLETE FLANGE 1,5 KW 230 V (HE1)	6500577300		●																			
	COMPLETE FLANGE 1,5 KW 230 V (HE1)	6500582000			●	●																	
0003	WIRED NTC PROBE (OUTLET TANK)	65122529		●	●	●																	
0006	WATER DRAIN STOPPER	65122531		●	●	●																	
0007	SUPPORT BRACKET	65122535		●	●	●																	
0012	WIRING (ELEMENT / MAIN BOARD)	65180072-01		●	●	●																	
0013	WIRING (CONTROL BOARD)	65115286		●	●	●																	
0014	PLASTIC COVER	65122554		●	●	●																	
0020	GASKET	65100866		●	●	●																	
0022	SAFETY VALVE WITH LEVER (1/2” 8,5 BAR)	571730		●	●	●																	
0023	ANODE D:22 L:110 M5	65151186		●																			
	ANODE D:25,5 L:180 M5-M8	977127-01			●	●																	
0033	FLANGE GASKET	65150952-FA		●	●	●																	
0036	P.C.B. (MAIN)	65116249		●	●	●																	
0040	BOTTOM BIG PLASTIC COVER	65122551		●	●	●																	
0043	CONTROL PANEL	65155889		●	●	●																	
0044	CABLE CLAMP	573266		●	●	●																	
0045	FLANGE SCREW M6X12	65114656		●	●	●																	
0050	POWER CABLE	570096		●	●	●																	
0051	POWER BOARD BOX	65122582		●	●	●																	
0053	CONFECTION DIELECTRIC JOINTS 1/2 (2PCS)	65116403		●	●	●																	
0055	CONTROL BOARD	65122320		●																			
	CONTROL BOARD	65122321			●																		
	CONTROL BOARD	65122322				●																	
0058	BAFFLE (1/2’’ H=159)	65152176		●	●	●																	
0059	BAFFLE (1/2’’ H=100)	65122536		●	●	●																	
0066	HOLDER FOR CONTROL BOARD	65155887		●	●	●																	
0067	WIRED NTC PROBE (INLET TANK)	65122528		●	●	●																	
0069	BYPASS VELIS	65122544		●	●	●																	
5000	ACCESSORIES																						
5001	ANTI-NOISE HEATING ELEMENT 1500W (HE2)	65153375		●	●	●																	
5002	ANTI-NOISE HEATING ELEMENT 1500W (HE1)	65153376		●	●	●																	

LIST OF THE ABBREVIATIONS

HW	:	Hot water.
CW	:	Cold water.
C	:	Ceramic resistance (normal heating).
Ca	:	Ceramic resistance (accelerated heating)
TP	:	Immersion heater.
1F	:	With fittings.
2F	:	Without fittings.
3F	:	With fittings and another outlet connection.
AMI	:	With mixing valve.
SMI	:	Without mixing valve.
PUISS	:	Power of th appliance.
PN	:	Appliance with normal pression.
LP	:	Appliance with low pression.
PV	:	Appliance with variable power.
PF	:	Appliance with fixed power.

IDENTIFICATION PLATE

SERIAL NUMBER

6 Characters : 03 09 08
- Year of manufacture
- Manufacturing day
- Month of manufacture

9 Characters : 5 9 12 0606
- Year of manufacture
- Month of manufacture
- Sequencial number

14 Characters : SI-V-0B0 45 07 0001
- Sequencial number
- Year of manufacture : 6 → 2004, 7 → 2005, 8 → 2006, etc ...
- Month of manufacture : 25 → January, 13 → February, 32 → March, 35 → April, 39 → May, 45 → June, 43 → July, 29 → August, 40 → September, 38 → October, 51 → November, 12 → December
- Product model

14 Characters : 111518 XX 000010
- Month of manufacture
- Day of manufacture
- Sequencial number
- Year of manufacture

15 Characters : 02 11 00001 007843
- Year of manufacture
- Month of manufacture
- Product reference
- Sequencial number

21 Characters : 3200050 XX 08115 0000001
- Product reference
- Sequencial number
- Year (08) / Manufacturing day (115)

22 Characters : 3200050 XX 070115 0000001
- Product reference
- Sequencial number
- Year (07) / Month (01) / Manufacturing day (15)

The indications mentionned on the prices, commercial or technical literature and the scheme are written for your guidance and are available at a given time. The CONSTRUCTOR retains the power to modify the presentation, the form, the size, the conception or the material of the products.